Thank you for your purchase of the FUNN ZIPPA LITE ISCG05 CHAINGUIDE.

Please take a moment to review these instructions thoroughly before you start the installation process. It's crucial to follow the fitting instructions in sequence to meet FUNN's warranty policy requirements.

TOOLS REQUIRED

- **Hex key 4mm**
- **Torque wrench**

CONTENTS

- **Zippa Lite ISCG05** --------- **1 SET**
- **M6x10mm Countersunk Bolt** --------- **2 PCS**
- **M5x15mm Hex Bolt** --------- **1 PC**
- **Spacer** --------- **5 PCS**
- **M6x16mm Countersunk Bolt** --------- **2 PCS**

INSTALLATION

1. Remove the top guide from the Zippa Lite chain guide. Align the mounting plate with the ISCG05 tabs on the frame and secure it with the M6 bolts.

   Note that certain cranksets may need to be removed to access the ISCG05 tabs.

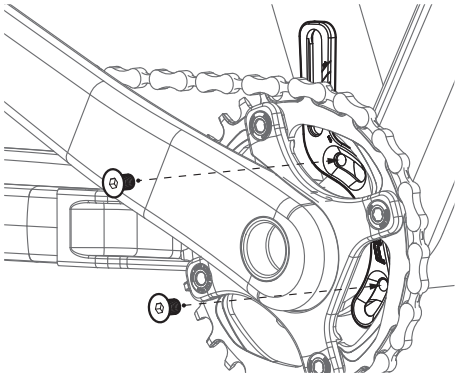

2. Attach the top guide to the mounting plate and check if the top guide and the chain are properly aligned.

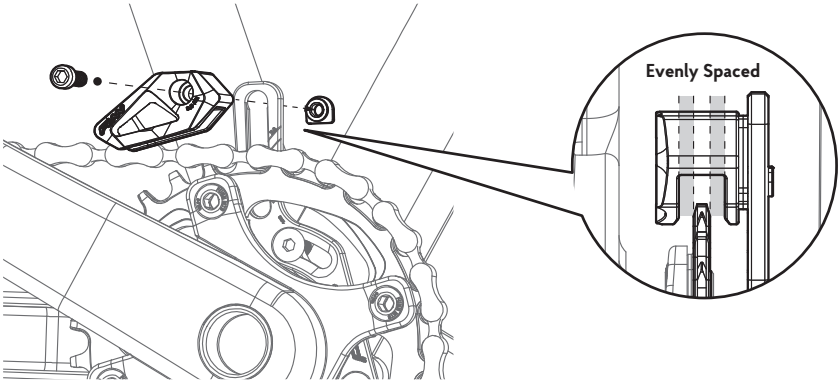

3. To adjust chain alignment, insert the provided spacers between the top guide and the mounting plate, and loosely thread in the fixing bolt with 4mm hex key.

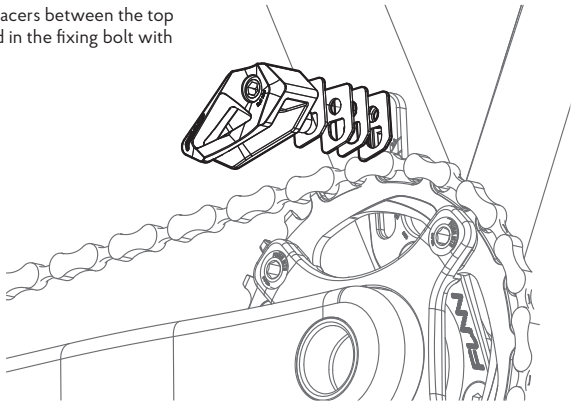

4. Fine-tune the top guide's height, ensuring it's as low as possible without touching the chain, chainring, or chainring bolts, then fasten the fixing bolt.

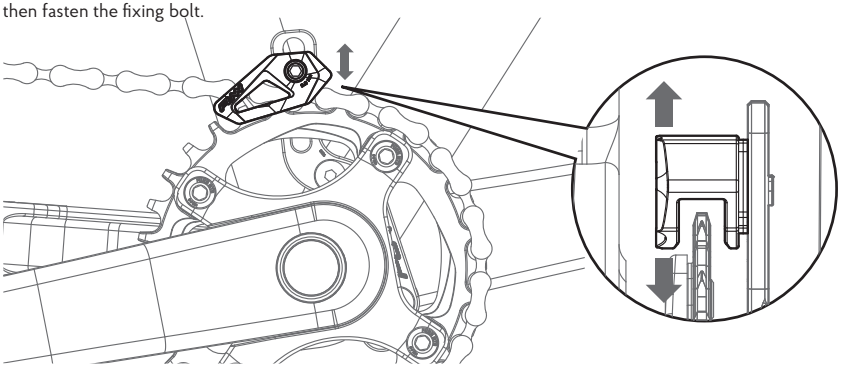

5. Loosen the M6 bolts to adjust the angle of the top guide.
Once you've achieved the desired angle, tighten the chain guide bolts to 5Nm. Rotate the crankset to confirm smooth chain movement with no contact in any gear. If all checks out, installation is complete—time to hit the trails!

