TAIPAN PEDALS
INSTALLATION AND USE

Thank you for choosing Taipan Pedals for your mountain bike.

Proper installation is crucial for optimal performance and compliance with our warranty policy. Follow these step-by-step instructions and illustrations carefully. Our product offers superior grip, durability, and performance. Enjoy your new pedals and happy riding!

TOOLS REQUIRED

- **Hex key 8mm**

CONTENTS

- **Pedals** ..... **1 SET**
- **Hex key 2.5mm** ..... **1 PC**

PEDAL INSTALLATION

1. Identify the left and right-hand side pedals. The left-side pedal has a lathed mark on the axle head, while the right-side pedal does not have any markings. Carefully inspect each pedal to ensure you install them in the correct location.

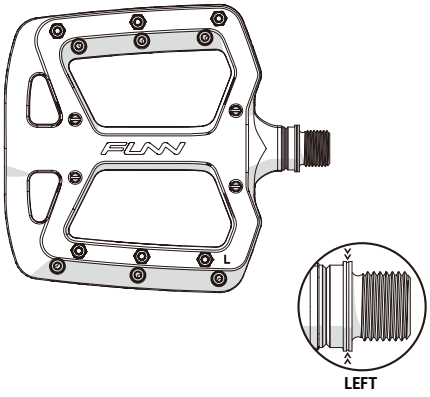

LEFT **RIGHT**

2. Lightly lubricate the axle threads with grease before installing the pedals onto the crankset. This will make it easier to install the pedals and prevent them from seizing or becoming difficult to remove in the future.

3. Thread the axle into the crank hole using your fingers. Follow the illustrated directions for tightening the left and right pedals carefully to ensure that they are properly attached to the crankset. Be careful not to cross-thread the axle, as this could damage the threads on the crank and result in a crash.

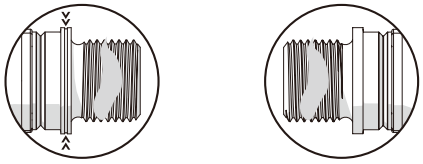

LEFT **RIGHT**

4. Insert a 8mm hex key into the end of the axle and tighten the pedal to 34Nm torque. Avoid applying excessive force to prevent damage to the pedal or the crankset. Double-check that both pedals are tightly installed and properly aligned before riding.

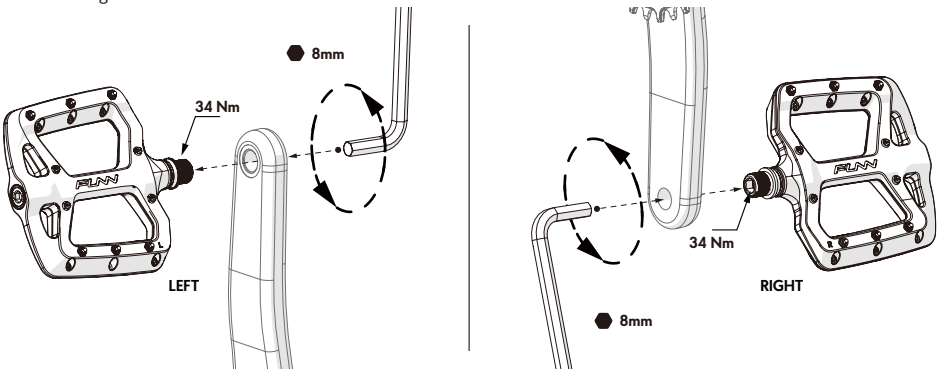

GRIP PINS

The Taipan and Taipan S pedals come with round-tip pins that are shin-friendly while maintaining a firm grip. When pins become worn out, replacement pin kits are readily available for these models. Removal and installation of pins are easily achieved with a 2.5mm hex wrench.



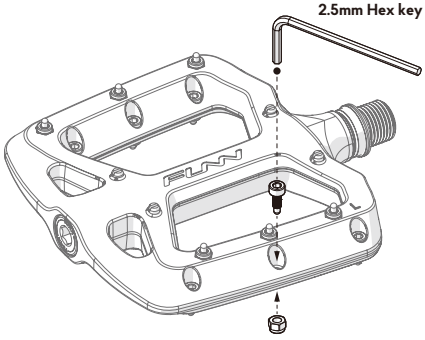

MAINTENANCE

To ensure the longevity and optimal performance of your Taipan pedals, we recommend the following maintenance tips:

1. Check the condition of your pedals regularly - Rotate the pedals and check for any lateral movement or roughness in their movement.

2. Replace worn or damaged bearings and axles - should the axle system show signs of wear or damage, it is advisable to replace it. A replacement axle kit can be purchased separately. For detailed instructions on replacing the axle, please refer to our website.

3. Replace pedals if there is a fracture in the pedal body - If you notice any cracks or fractures in the pedal body, replace the pedals immediately to prevent any potential accidents.

Welcome to the Taipan Pedals Bearing and Axle Replacement Guide

Before beginning the maintenance on Taipan pedals, ensure a seamless process by utilizing high-quality tools to avoid damaging the screw sockets. It's advisable to service your pedals one side at a time to avoid mixing up parts. Additionally, be mindful of thread directions, as indicated by diagrams on both sides of the pedal, and pay special attention when handling these specific parts.

NEW AXLE KIT



Pedal axles | Outer seals | Inner seals | Bushings | Bearings | Spacers | Axle nuts | Side caps



M4 bolt | M4 nut | Spacer

TOOLS REQUIRED

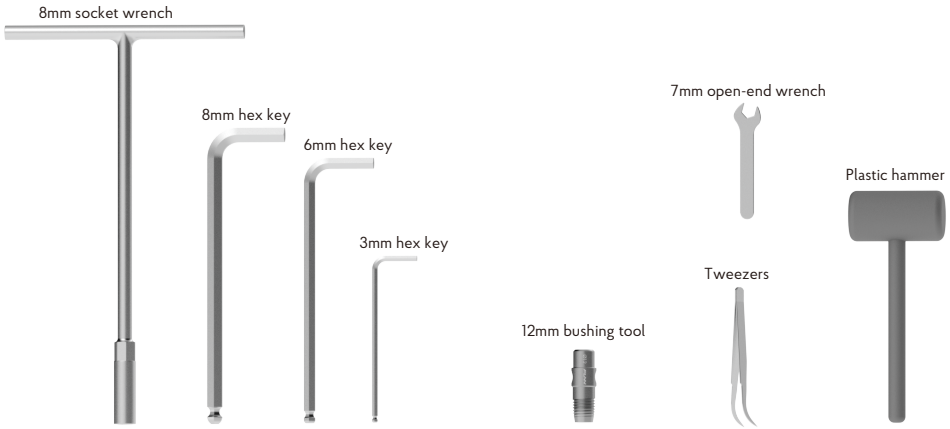

STEP 1 : Remove the side cap using a 6mm hex key.

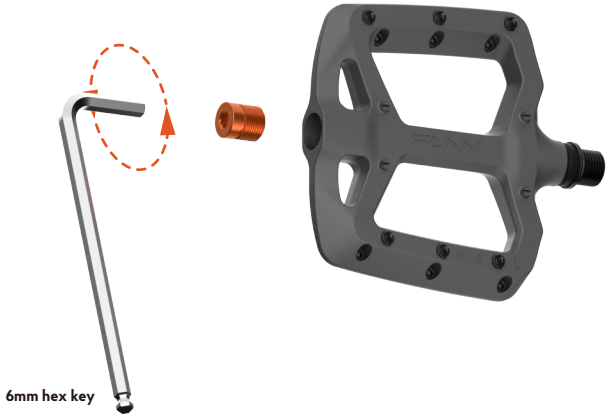

STEP 2 : Secure the axle with an 8mm hex key, then use an 8mm socket wrench to loosen the axle nut. Be aware of the thread direction on each side of the pedal.

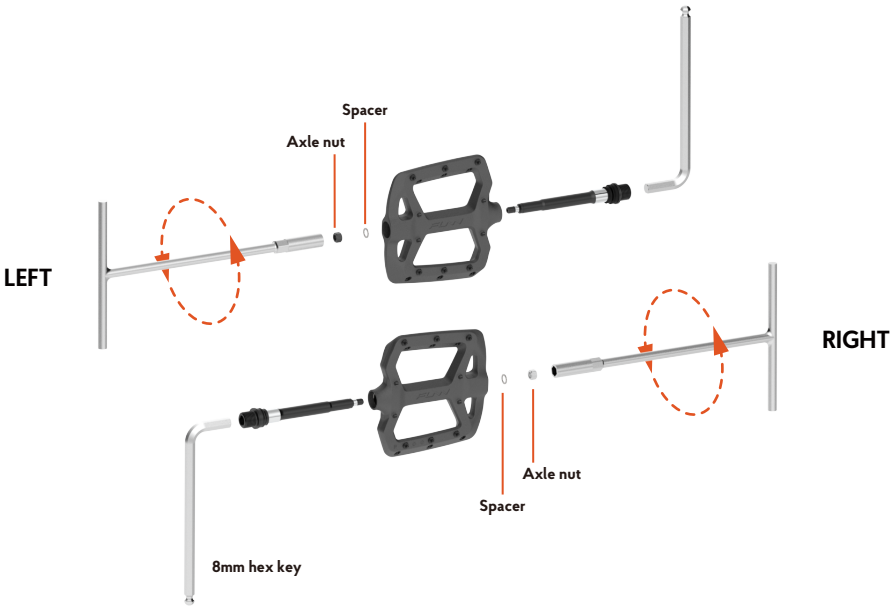

STEP 3 : Inside the axle bore, you'll find an inner seal. Use tweezers to gently remove it.



STEP 4 : To extract the bearing from inside the pedal, start by inserting an M4 bolt into the pedal body with a 3mm hex key. Then, fit a washer and M4 nut onto the M4 bolt .

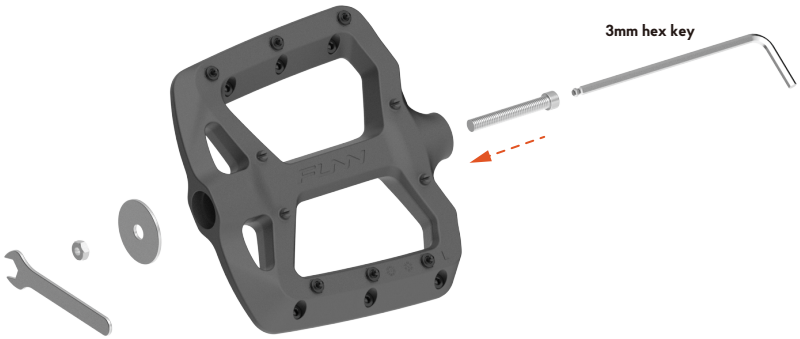

STEP 5 : Secure the M4 nut with a 7mm open-end wrench, and use the 3mm hex key to tighten the M4 bolt. Continue tightening the M4 bolt until the bearing is extracted.

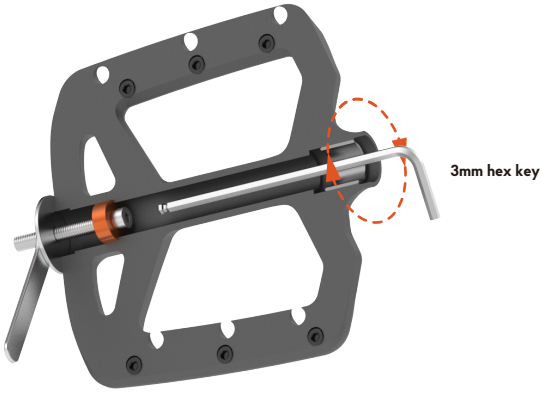



STEP 6 : To extract the bushing from the pedal body, secure the pedal body in a vise. It's advisable to place a cloth between the pedal body and the vise to protect the pedal's surface.

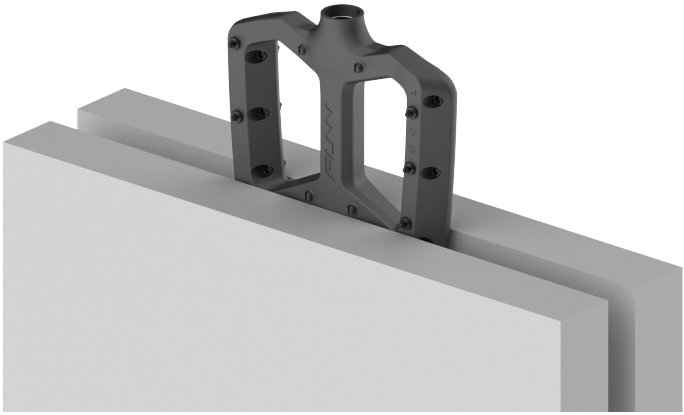

STEP 7 : Push and screw the bushing tool into the bushing within the pedal body. Once the tool is fully engaged with the bushing, pull it out to remove the bushing.

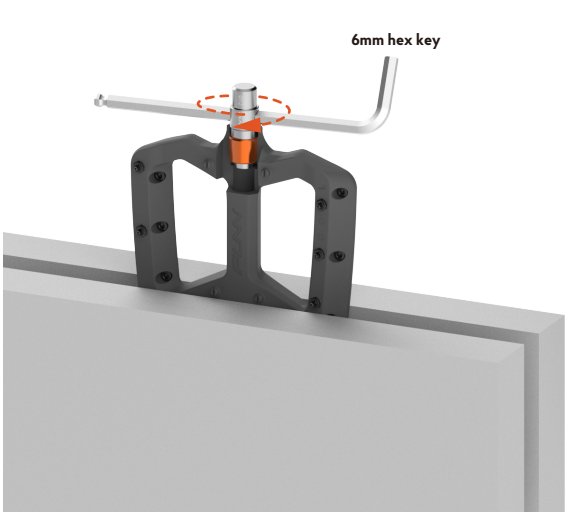

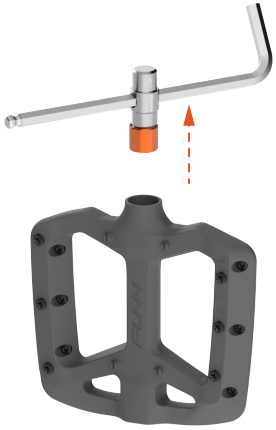

STEP 8 : Position the new bushing on the bushing tool. Then, gently tap the bushing tool with a plastic hammer to install the new bushing.

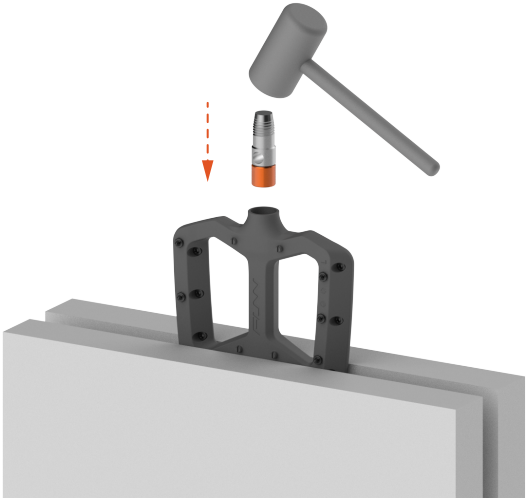

STEP 9 : Apply grease on the interface between the side cap and the bearing's outer race. Push the new bearing into the pedal by tightening the side cap into the pedal. Make sure the side cap absolutely bottoms out to make sure the bearing is properly seated.

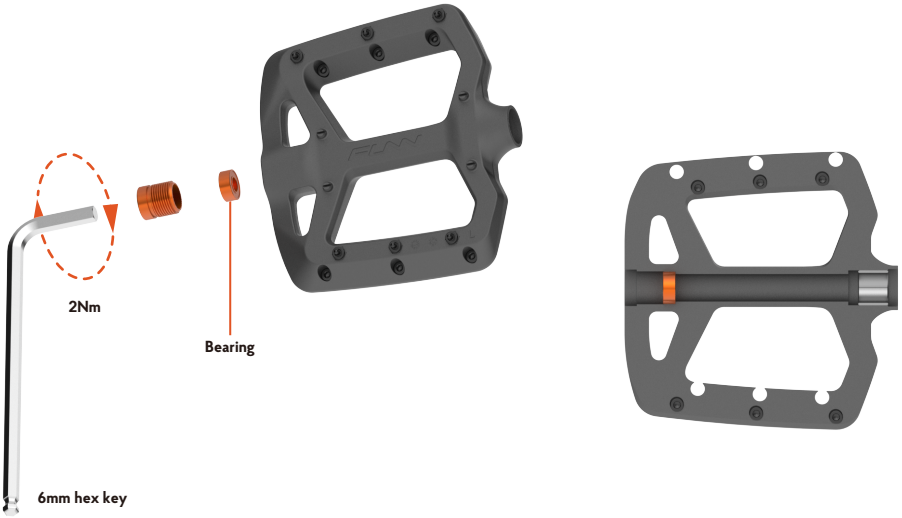

STEP 10:

Identify the left and right-hand side axles. The left-side axle has a lathed mark on the axle head, whereas the right-side pedal has no markings. Fit the new outer and inner seals onto the axle, paying attention to the orientation of the seals. Then, apply grease to the areas of the axle that come into contact with the bearing and bushing.



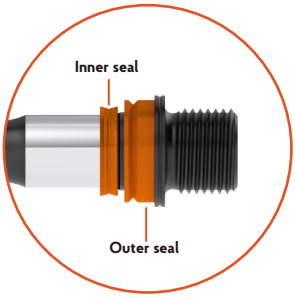

STEP 11:

Insert the pedal axle into the pedal body, holding the axle head steady with an 8mm hex key. Next, tighten the axle nut using an 8mm socket wrench. Remember, the silver nut corresponds to the right side axle, while the black nut is designated for the left side axle. It's important to note that the thread directions differ on each side of the pedals. After securely fastening the nut, ensure the pedal body pivots smoothly and without any resistance.

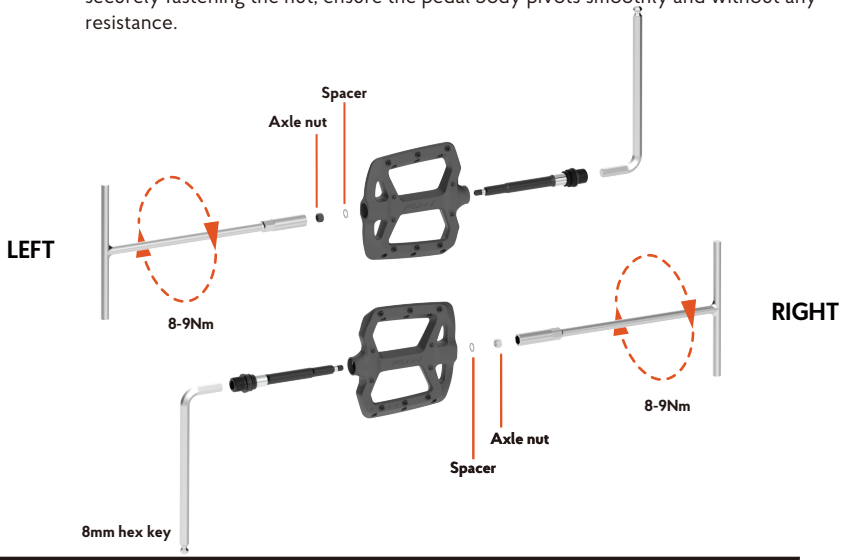

STEP 12: Reattach the side cap using a 6mm hex key. After installation, check that the axle rotates smoothly and is free from any side-to-side movement.

