FASTAIR TUBELESS VALVES
INSTALLATION AND USE

Thank you for purchasing the FUNN FASTAIR TUBELESS VALVES.

Please read these instructions thoroughly before attempting to install this item.
Following all fitting instructions in order is required for compliance with FUNN's warranty policy.

CONTENT

- **FastAir tubeless valves** ---------- **2 PCS**

VALVE STEM INSTALLATION

1. Remove the tire and old valve stem from your tubeless rim, dispose of sealant and wipe the rim clean. Check the rim tape condition and replace it, if necessary. Remove the valve cap, lock nut, and o-ring from the FastAir valve stem. Insert the valve stem into the valve hole.
2. Place the o-ring and lock nut onto the valve stem, ensuring that they are properly positioned on the rim. Tighten the lock nut to seal the valve hole securely.

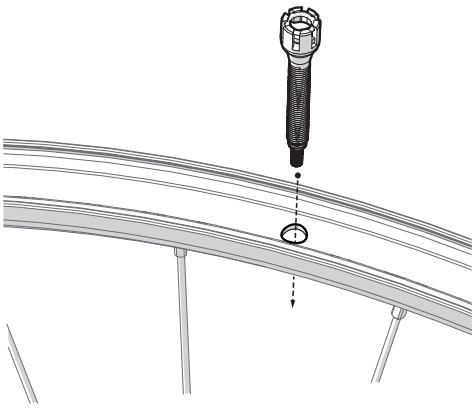

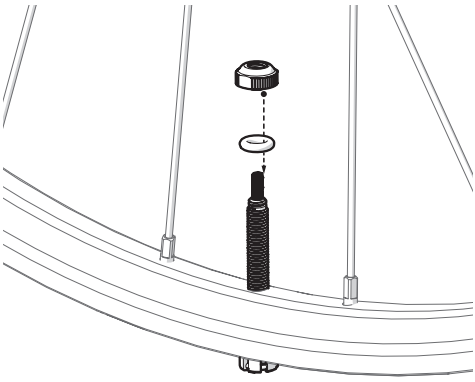

3. Install the tire and inflate the tire to the desired pressure.
* **Ensure that you do not apply too much pressure on the center tube in the valve stem when attaching the pump head. Excessive force could deform the center tube and potentially damage the valve.**
4. Fasten the valve cap to seal the valve stem.

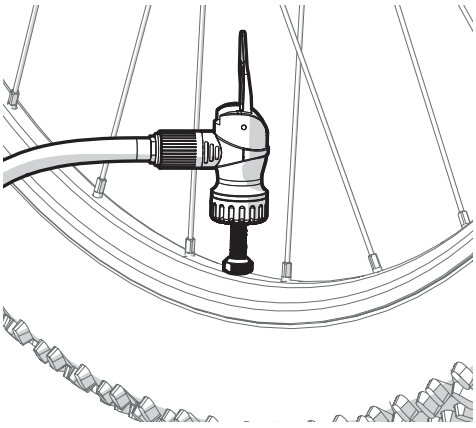

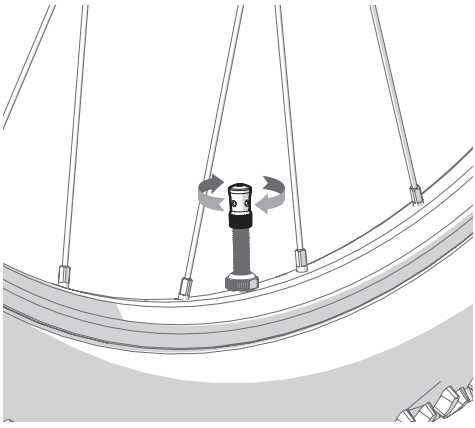

TO LOWER THE TIRE PRESSURE

1. Unscrew the valve cap by turning it counterclockwise 5 to 7 turns.
2. Press down on the cap to release air from the tire and fine-tune the pressure to your desired level.
3. When you have reached the desired pressure, reattach the valve cap by screwing it back on clockwise.

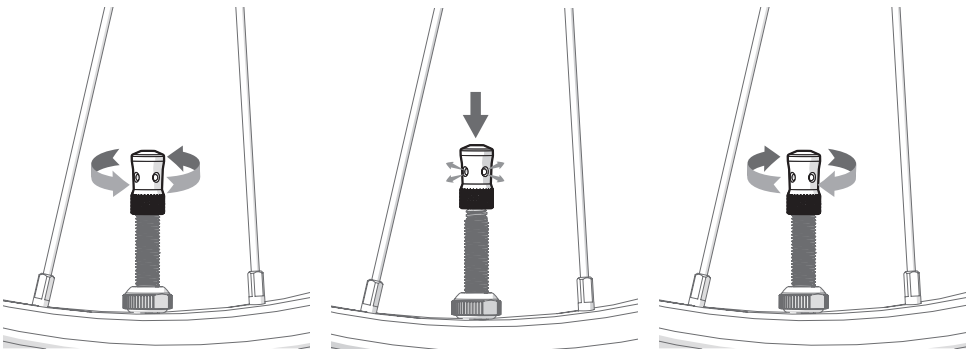

FASTAIR TUBELESS VALVES
INSTALLATION AND USE

TO ADD MORE TUBELESS SEALANT

1. Fully deflate the tire and remove the valve cap.
2. Attach a hose to the valve stem and fill the sealant through the center of the stem.
3. **Wipe off the excessive sealant on the valve stem as the sealant can potentially clog the cap and prevent it from functioning properly.** Fasten the valve cap to seal the valve.
4. Alternatively, you can open a portion of the tire from the rim and fill the sealant directly into the tire.

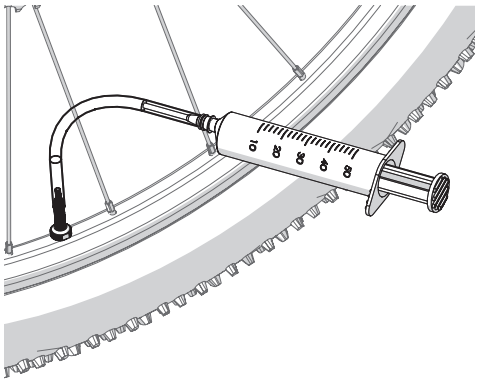

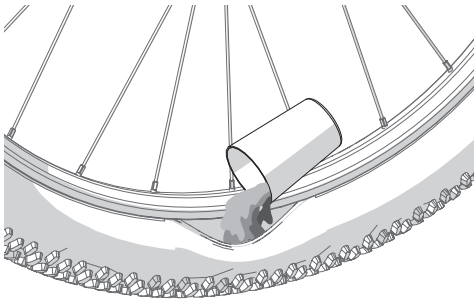

VALVES KIT REPLACE

1. Remove the valve cap and unscrew the lock nut to remove the valve stem from the rim.

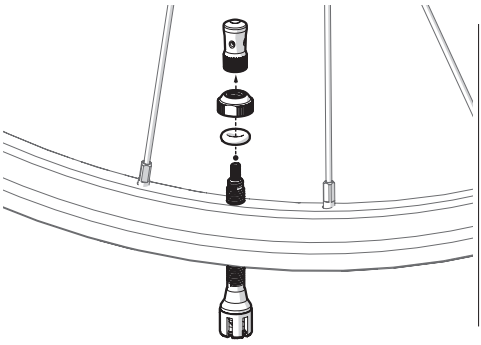

2. Use tweezers to remove the snap ring at the bottom of the valve.

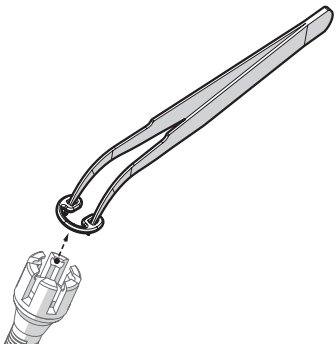

3. Remove the valve core and thoroughly clean the valve core and valve stem. A valve core replacement kit is available from us, if the condition of the valve core is beyond repair.

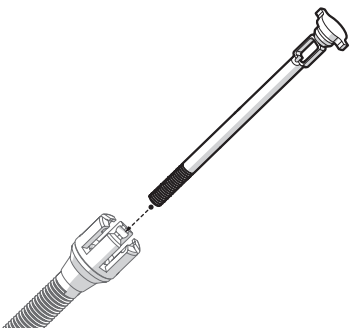

4. When the valve core is back in the valve stem, insert one side of the snap ring into the groove at the bottom of the valve stem. Then push the snap ring all the way back into the groove.

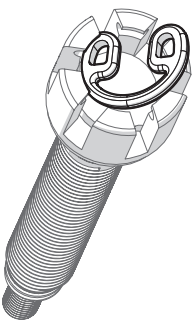

5. Push the valve core to ensure that the snap ring is properly seated and that the snap ring is not pushed out. The valve stem is now fully serviced and ready to be reinstalled on the rim.

